150W Triple Output Standard Series

- High reliability, low cost
- Top brand components for key parts
- Built-in EMI filter
- Protections: overload/ short circuit
- 5 years limited warranty
- F615 199 × 98 × 50(mm)

AC input voltage range.....170~264VAC (210~370VDC)
Inrush current .....cold start, 40A/230V
Input leakage current.....＜0.7mA/ 230VAC
Line regulation (full load).....≤±0.5%
Voltage tolerance.....V_1: ≤±1%, V_2,V_3: ≤±3%
Output voltage adjust range .....V_1: ±5% of rated output voltage
Output overload protection .....105~130%
Withstand voltage.....I/P -O/P: 1.5KVAC/1min
I/P -F/G: 1.5KVAC/1min
O/P-F/G: 0.5KVAC/1min
Rise time.....50ms@full load (typical)
Hold up time .....20ms@full load (typical)
Operating temperature .....-20℃~+50℃
Safety standards.....design meet GB4943, UL60950, EN60950
Cooling method .....convection

Model	DC Output		R&N	Efficiency
HF150W-T-A	24V	0.5~4.0A	150mV	78%
	12V	0.0~3.0A	120mV	
	5V	0.0~3.0A	100mV	
HF150W-T-B	24V	1.0~5.0A	150mV	85%
	+12V	0.0~1.0A	120mV	
	-12V	0.0~1.0A	120mV	
HF150W-T-L	5V	1.0~6.0A	100mV	74%
	12V	0.1~4.0A	120mV	
	24V	0.0~2.5A	150mV	
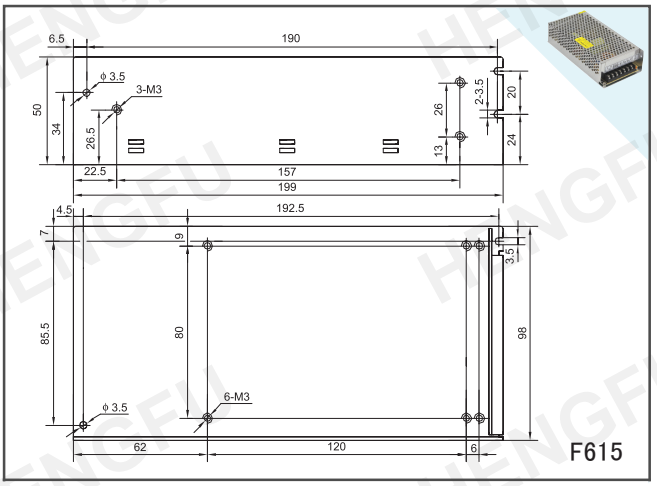
Drawing